Rosenstark-like Representation of Feedback Amplifier Resistance

Christian Falconi, Arnaldo D'Amico
DIE — Università di Tor Vergata
Via Politecnico 1, I-00133, Rome, Italy
e-mail: falconi@eln.uniroma2.it

Gianluca Giustolisi, Gaetano Palumbo
DIEES — Università di Catania
Viale A. Doria 6, I-95124, Catania, Italy
e-mail: ggiustolisi@diees.unict.it

***Abstract*— We propose a representation and a related methodology for evaluating the exact input and output resistances of feedback amplifiers. The approach is based on the generalization of the Rosenstark theorem. Indeed, it requires the computation of two resistances (direct and asymptotic) each one evaluated in one of the two ideal and extreme conditions of the return ratio (zero or infinity). Due to these characteristics, the representation allows one to understand what happens to a feedback amplifier resistance in the case of absence of feedback or in the ideal case of infinite feedback.**

I. Introduction

Feedback has the property to change (increase or decrease) the input/output resistances (impedances) of the open loop amplifier [1]–[6].

As for evaluating the transfer function of feedback amplifiers, there are different methods for calculating the exact input/output resistances of the closed loop amplifiers. The most straightforward one is to directly analyze the circuit by writing the Kirchhoff equations on the small-signal circuit. However, this approach, apart of being computationally tedious, does not allow one to disclose the general properties of feedback circuits.

Another used approach models the amplifier and the feedback network with their proper two-port models [2], but the two-port network which models the block must be selected judiciously and for exact results (which also include the non-unidirectional nature of real blocks) the analysis becomes extremely elaborate.

An efficient approach for evaluating the input and output resistances was introduced by Blackman [7] in 1943. Then it was proposed again by Rosenstark [8], introduced the first time in a textbook [1], and independently developed through signal flow graph analysis by Choma [9]. The Blackman approach gives its fame to its simplicity and powerfulness. Indeed, even Rosenstark in its original manuscript suggested the use of Blackman theorem for evaluating input/output resistances in feedback amplifiers. However, as we shall discuss in the next section, despite its advantages that justify its fame, Blackman theorem has also some drawbacks.

In this paper we propose an alternative representation and a related methodology for evaluating exact input and output resistances of feedback amplifiers. The representation comes from a generalization of the Rosenstark representation, and provides some interesting features.

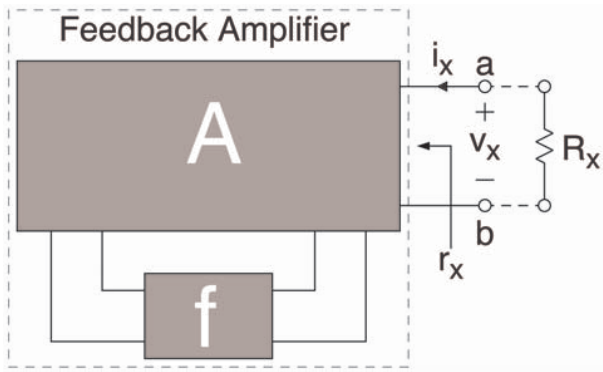

Fig. 1. Block schema of a feedback amplifier.

II. The Blackman Theorem

Without any loss of generality, let us consider the block schema of the amplifier in Fig. 1 and assume we want to evaluate the resistance r_x at gate a–b. Naming the amplifier return ratio as $T(R_x)$, where the dependence on the external resistor R_x is explicitly shown, the Blackman theorem states that [5], [7], [8]

$$r_x = r_{x,ol}\frac{1+T(0)}{1+T(\infty)} \tag{1}$$

In relationship (1), $r_{x,ol}$ is the resistance at gate a–b in open-loop configuration (more in general, when the return ratio is zero); $T(0)$ and $T(\infty)$ are the return ratios evaluated when gate a–b is short-circuited ($R_x = 0$) or left open ($R_x \to \infty$), respectively.

A drawback of the Blackman representation is due to the fact that, differently from the Rosenstark representation, it does not give any explicit information about the ideal and asymptotic value of r_x, (i.e., when $T(R_x) \to \infty$), which becomes an important and practical parameter in many applications. Moreover, it requires the evaluation of two different return ratios.

III. The Proposed Representation and Methodology

A. Flow graph analysis

Consider the linear circuit represented by the signal flow graph shown in Fig. 2 [5]. Variables x_s and x_o represent

1-4244-0921-7/07 $25.00 © 2007 IEEE.

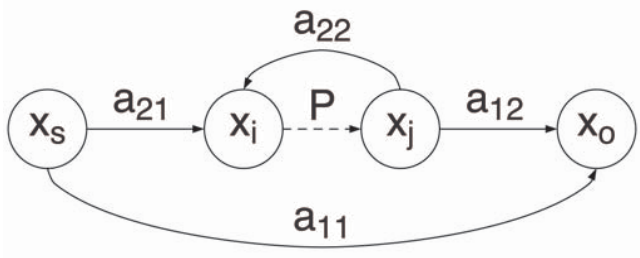

Fig. 2. General signal flow graph of a Feedback circuit.

the input and output signals, moreover, two other generic variables, x_i and x_j, linked together through the control (or critical) parameter P, are explicitly shown. Parameters a_{ij} are the weight branches. Variables x_i, x_j and the control parameter, P, model a controlled generator, or the relation between voltage and current across two nodes of the circuit.

Inspecting Fig. 2, we note that term a_{11} is the transfer function between the input and the output, setting the control parameter, P, to zero; term a_{12} is the transfer function between the output and the controlled variable, x_j, setting the input source, x_s, to zero; term a_{21} represents the transfer function between the source variable and the inner variable, x_i, when the controlled variable, x_j, is set to zero (i.e., setting the control parameter, P, equal to zero); term a_{22} gives the relation between the independent and the controlled inner variables setting control parameter, P, and input variable, x_s, to zero.

Writing variable x_o and x_i versus the other two, x_s and x_j, we get

$$x_o = a_{11}x_s + a_{12}x_j \tag{2a}$$

$$x_i = a_{21}x_s + a_{22}x_j \tag{2b}$$

Then, exploiting the relationship $x_j = Px_i$ and solving (2b) for x_i, yields

$$x_i = \frac{a_{21}}{1 - Pa_{22}} x_s \tag{3}$$

By substituting (3) into (2a), the following relationship holds

$$X_F = \frac{x_o}{x_s} = \frac{a_{11}}{1 - Pa_{22}} + \left(a_{11} - \frac{a_{12}a_{21}}{a_{22}}\right)\frac{-Pa_{22}}{1 - Pa_{22}} \tag{4}$$

B. Proposed representation

Resistance r_x at gate a–b of Fig. 1 can be evaluated by using (4) for the specific case in which x_o and x_s are the voltage, v_x, and the current, i_x, at gate a–b, respectively. In particular, referring to gate a–b, relationship (4) allows us to define the *direct resistance*, $r_{x,ol}$, (or, equivalently, the resistance in open loop configuration) and the *asymptotic resistance*, $r_{x,\infty}$, as those resistances evaluated when the control parameter is set to zero and infinity, respectively. Thus we get

$$r_{x,ol} = \left.\frac{v_x}{i_x}\right|_{P=0} = a_{11} \tag{5a}$$

$$r_{x,\infty} = \left.\frac{v_x}{i_x}\right|_{P\to\infty} = -\frac{a_{12}a_{21}}{a_{22}} + a_{11} \tag{5b}$$

Moreover, it is apparent that once we explicitly identify the controlled source element (represented by the controlled source quantity, x_j, the controlling quantity, x_i, and the critical parameter P, so that $x_j = Px_i$), the term $a_{22}P$ is the corresponding return ratio. It is worth noting, however, that for the return ratio, the input signal (x_s in Fig 2) must be set to zero. This corresponds to setting the input source, ix, to zero. Thus the return ratio must be evaluated with the gate a–b open, that is

$$T(\infty) = -P\left.\frac{v_x}{i_x}\right|_{i_x=0} = -P\left.\frac{v_x}{i_x}\right|_{R_x\to\infty} = -Pa_{22} \tag{6}$$

In conclusion, the resistance r_x at gate a–b takes the form

$$r_x = r_{x,\infty}\frac{T(\infty)}{1+T(\infty)} + r_{x,ol}\frac{1}{1+T(\infty)} \tag{7}$$

Differently from the Blackman theorem, the novel representation in (7) requires the evaluation two useful resistances and of one return ratio only. Specifically, likewise the Rosenstark theorem, it makes use of an *asymptotic term*, given by resistance $r_{x,\infty}$, which describes the closed-loop resistance at gate a–b when an ideal and infinite return ratio is assumed.

C. Resistance evaluation

To evaluate the three terms of the closed-loop resistance, relationship (4), we have to explicitly identify a critical controlled source (represented by $x_j = Px_i$) and follow the steps given below:

1) *Evaluation of the open-loop resistance*, $r_{x,ol}$. Turn off the critical controlled source setting $P = 0$ and evaluate the resistance of the gate a–b to achieve its open-loop value. Note that, if P is associated to a controlled current (voltage) source, condition $P = 0$ requires an open circuit (short circuit) to replace the branch containing the controlled source.
2) *Evaluation of the asymptotic resistance*, $r_{x,\infty}$. Set the critical parameter to infinity ($P \to \infty$) and evaluate the resistance of the gate a–b to achieve its asymptotic value. Under this condition, since the controlled variable, x_j, must be a finite quantity, the controlling variable, x_i, is forced to 0. Note that the *asymptotic resistance*, stands for the resistance under the ideal condition of infinite loop-gain.
3) Evaluation of the return ratio, $T(\infty)$. Maintain the gate a–b open ($R_x \to \infty$) and replace the critical controlled voltage (current) source with an independent voltage (current) generator, S. Then evaluate $a_{22} = x_i/S$ and the return ratio as $T(\infty) = -Pa_{22} = -P(x_i/S)$.

IV. Example

In order to show the use of relationship (7), consider the circuit in Fig. 3(a), where a common source topology with source degeneration and a further feedback resistance, R_F, is depicted. Its small signal model, neglecting MOS output resistance and setting to zero (i.e. shorting) the input signal generator, is plotted in Fig. 3(b).

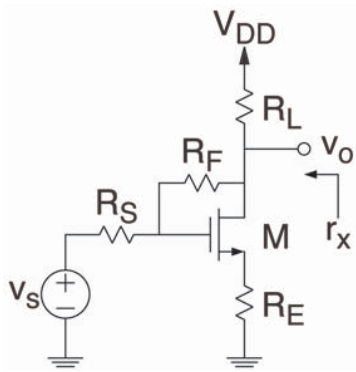

(a) Transistor level model

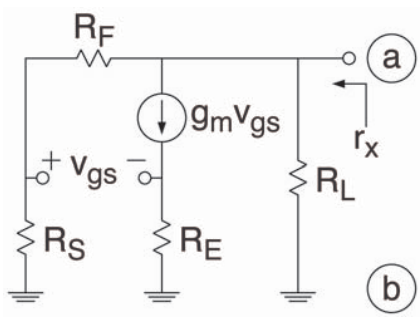

(b) Small signal model

Fig. 3. Feedback amplifier example.

Assume the voltage-controlled current source as the critical element and let the transconductance g_m be the control parameter, P. According to previous section, setting $P = 0$ and inspecting the circuit in Fig. 3(b), it is easy to find the resistance at gate a–b which results

$$r_{x,ol} = (R_F + R_S) \parallel R_L \tag{8}$$

To evaluate the asymptotic resistance, $r_{x,\infty}$, we first analyze the circuit in Fig. 4, where also the current probe, i_{probe}, is included, and then we add the contribution of the resistance R_L. In the process, we consider the critical parameter infinitely large and, since the controlled variable, $g_m v_{gs}$, must be a finite quantity, this means setting the voltage v_{gs} equal to zero. Thus, having $v_g = v_s$, we can write

$$i_{RF} = \frac{R_E}{R_S} g_m v_{gs} \tag{9}$$

and, considering that $i_{\text{probe}} = i_{RF} + g_m v_{gs}$, we have

$$g_m v_{gs} = \frac{R_S}{R_E + R_S} i_{\text{probe}} \tag{10}$$

Therefore, the voltage v_{ab} at gate a–b is

$$v_{ab} = (R_F + R_S)\, i_{RF} = \frac{R_F + R_S}{R_E + R_S} R_E i_{\text{probe}} \tag{11}$$

which gives

$$r_{x,\infty,\text{simpl}} = \frac{v_{ab}}{i_{\text{probe}}} = \frac{R_F + R_S}{R_E + R_S} R_E \tag{12}$$

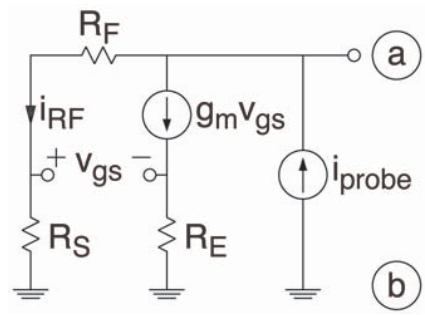

Fig. 4. Simplified circuit for evaluating the asymptotic resistance.

and, considering the contribution of R_L, the final asymptotic resistance results

$$r_{x,\infty} = \left(\frac{R_F + R_S}{R_E + R_S} R_E \right) \parallel R_L \tag{13}$$

To evaluate the return ratio $T(\infty)$ we first substitute the controlled source $g_m v_{gs}$ with an independent current source, i_S, and then we search for the former controlling voltage, v_{gs}. Voltage v_g is given by the amount of current i_S that flows on R_S due to the parallel between $R_S + R_F$ and R_L, that is

$$v_g = -\frac{R_S R_L}{R_F + R_S + R_L} i_S \tag{14}$$

while voltage v_s is simply given by the product $R_E i_S$. Therefore, we have

$$T(\infty) = -g_m \left. \frac{v_{gs}}{i_S} \right|_{i_x=0} = g_m \left(\frac{R_S R_L}{R_F + R_S + R_L} + R_E \right) \tag{15}$$

Finally, substituting (8), (13) and (15) in (7) we get the exact expression of resistance r_x.

V. Remarks

A. Cases with indefinite form

The proposed approach seems to be very interesting, since it overcomes the above mentioned drawbacks of the Blackman theorem. However, in some simple cases a difficulty could arise for the determination of an indefinite mathematical form.

For example consider the circuit shown in Fig. 5(a) and suppose we want to calculate the output resistance following the procedure discussed in Section III. The equivalent small signal model is shown in Fig. 5(b), where also the MOS output resistance is included. The direct resistance can be immediately derived

$$r_{x,ol} = r_o + R_E \tag{16}$$

To evaluate the return ratio we note that with the gate a–b open, the current through resistance R_E is zero thus setting voltage v_{gs} to zero, also. Hence we have

$$T(\infty) = 0 \tag{17}$$

Regarding the asymptotic resistance, if g_m goes to infinity and the product $g_m v_{gs}$ must remain a finite quantity, then $v_{gs} = 0$. As a consequence the current through R_E, or

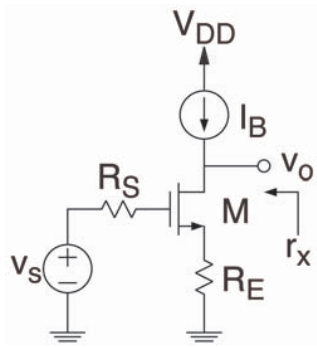

(a) Transistor level model

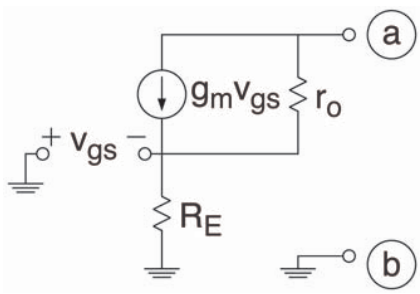

(b) Small signal model

Fig. 5. Indefinite form example.

equivalently the probe current, is forced to be zero. Thus we get

$$r_{x,\infty} = \infty \tag{18}$$

Substituting (16)–(18) into (7), the indefinite form '$0 \cdot \infty$' is apparent.

The situation analyzed is common for some circuits which present a series-feedback connection at the gate of interest. In particular, it occurs when there is no shunt resistance between the two nodes of the gate.

The drawback can be simply overcome by introducing a dummy resistor between nodes a and b, R_{ab}. Then, we determine the terms $r_{x,ol}(R_{ab})$, $r_{x,\infty}(R_{ab})$ and $T(R_{ab})$ and, after evaluating $r_x(R_{ab})$ through (7), we have only to calculate the limit for $R_{ab} \to \infty$. Referring to the example in Fig. 5, under this assumption (16)–(18) become

$$r_{x,ol}(R_{ab}) = \frac{(r_o + R_E)R_{ab}}{r_o + R_E + R_{ab}} \tag{19a}$$

$$r_{x,\infty}(R_{ab}) = R_{ab} \tag{19b}$$

$$T(R_{ab}) = \frac{g_m r_o R_E}{r_o + R_E + R_{ab}} \tag{19c}$$

Then (7) results

$$r_x = \lim_{R_{ab}\to\infty} \left[\frac{R_{ab}\frac{g_m r_o R_E}{r_o+R_E+R_{ab}} + \frac{(r_o+R_E)R_{ab}}{r_o+R_E+R_{ab}}}{1 + \frac{g_m r_o R_E}{r_o+R_E+R_{ab}}} \right] = \\ = r_o + R_E + g_m r_o R_E \tag{20}$$

where the indefinite form is no more present.

B. Admittance complementary form

Instead of the resistance, we can evaluate the admittance, g_x, at gate a–b of a feedback circuit through the complementary form of relationship (7). Specifically, we can evaluate (4) for the particular case in which x_o and x_s are the current, i_x, and the voltage, v_x, at gate a–b, respectively. Therefore, conductance g_x takes the form

$$g_x = g_{x,ol}\frac{1}{1+T(0)} + g_{x,\infty}\frac{T(0)}{1+T(0)} \tag{21}$$

In this case, once we explicitly identify the controlled source element, $g_{x,ol}$ and $g_{x,\infty}$ are evaluated as

$$g_{x,ol} = \left.\frac{i_x}{v_x}\right|_{P=0} \tag{22a}$$

$$g_{x,\infty} = \left.\frac{i_x}{v_x}\right|_{P\to\infty} \tag{22b}$$

while $T(0)$ is evaluated when the input source, v_x, is zero, that is when the gate a–b is short-circuited, namely

$$T(0) = -P\left.\frac{x_i}{x_j}\right|_{v_x=0} = -P\left.\frac{x_i}{x_j}\right|_{R_x=0} \tag{23}$$

VI. Conclusion

We proposed a representation and a related methodology for evaluating the exact input and output resistances of feedback amplifiers. The approach is based on the generalization of the Rosenstark theorem. Indeed, it requires the computation of two resistances (direct and asymptotic) each one evaluated in one of the two ideal and extreme conditions of the return ratio (zero or infinity). Due to these characteristics, the representation allows one to understand what happens to a feedback amplifier resistance in the case of absence of feedback or in the ideal case of infinite feedback.

References

[1] J. Millman and A. Grabel, *Microelectronics (second edition)*. McGraw-Hill, 1987.

[2] P. Gray and R. Meyer, *Analysis and Design of Analog Integrated Circuits (third edition)*. John Wiley and Sons, 1993.

[3] G. Palumbo and J. Choma Jr., "An Overview of Analog Feedback Part I: Basic Theory," *Analog Integrated Circuits and Signal Processing*, vol. 17, no. 3, pp. 175–194, Nov. 1998.

[4] ——, "An Overview of Analog Feedback Part II: Amplifier Configurations in Generic Device Technologies," *Analog Integrated Circuits and Signal Processing*, vol. 17, no. 3, pp. 195–219, Nov. 1998.

[5] G. Palumbo and S. Pennisi, *Feedback Amplifiers (Theory and Design)*. Kluwer Academic Publishers, 2002.

[6] R. D. Middlebrook, "The General Feedback Theorem: A Final Solution for Feedback Systems," *IEEE Microwave*, vol. 7, no. 2, pp. 50–63, Apr. 2006.

[7] R. Blackman, "Effect of Feedback on Impedance," *BSTJ*, vol. 22, pp. 269–277, Oct. 1943.

[8] S. Rosenstark, "A Simplified Method of Feedback Amplifier Analysis," *IEEE Trans. Educ.*, vol. E-17, no. 4, pp. 192–198, Nov. 1974.

[9] J. Choma Jr., "Signal Flow Analysis of Feedback Networks," *IEEE Trans. Circuits Syst.*, vol. 37, no. 4, pp. 455–463, Apr. 1990.